WaterVISE pre-filter pump 0.25–1.10 kW

Pumphousing and impeller with optimal construction, designed to ensure energy efficiency and quiet operation.
Proven and rigid bronze material in pump housing and impeller, stainless steel shaft and mechanical seal with thermoplastic pre-filter, which ensures long lasting endurance.

The pre-filter, with an easily detachable, transparent securing lid, is versatile with up to seven different inlet-positions. This allows flexible and compact installation. 2” thread inlet/outlet connections.

Features

- Pump housing and pump impeller made of bronze
- Pump shaft in acid proof stainless steel AISI 316L
- High-quality motors
- Versatile pre-filter allowing different inlet-positions
- Higher performance/energy ratio
- Reduced sound levels
- Third-party tested and certified

Technical data				Ampere		
Item no.	**Type**	**kW 50Hz**	**Voltage (V)**	**3~230V**	**1~230V**	**3~400V**
118100	HS25	0.25	230	-	1.95	-
118101	HS37	0.37	230	-	2.7	-
118121	HT37	0.37	230/400	2.1	-	1.2
118102	HS55	0.55	230	-	3.9	-
118122	HT55	0.55	230/400	2.8	-	1.6
118103	HS75	0.75	230	-	5.5	-
118123	HT75	0.75	230/400	2.9	-	1.7
118104	HS110	1.10	230	-	6.6	-
118124	HT110	1.1	230/400	4.2	-	2.4

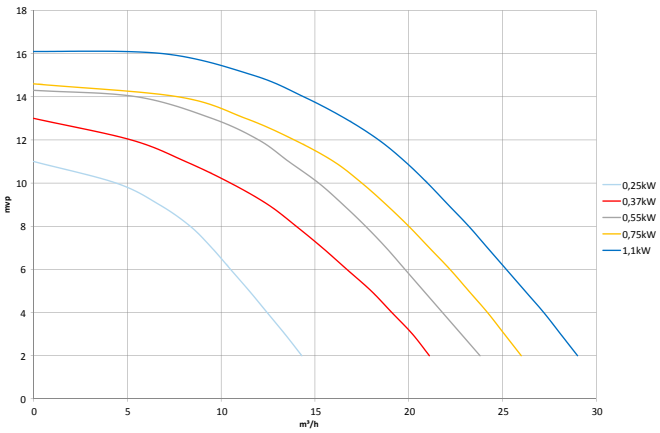

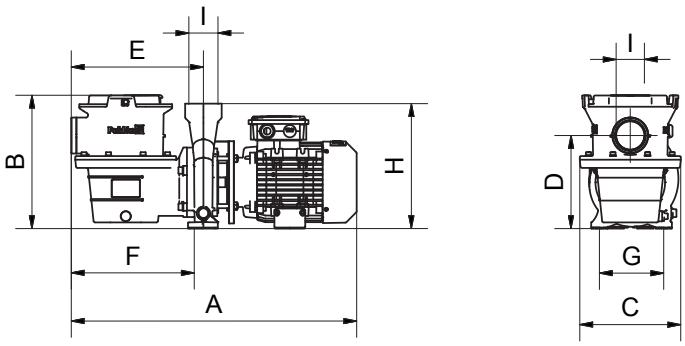

Dimensions										
Item no.	**Type**	**A**	**B**	**C**	**D**	**E**	**F**	**G**	**H**	**I**
118100	HS25	489	280	196	181	257	239	125	243	2”
118101	HS37	519	280	196	181	257	239	125	243	2”
118121	HT37	519	280	196	181	257	239	125	243	2”
118102	HS55	519	280	196	181	257	239	125	243	2”
118122	HT55	519	280	196	181	257	239	125	243	2”
118103	HS75	537	280	196	181	257	239	125	243	2”
118123	HT75	537	280	196	181	257	239	125	243	2”
118104	HS110	555	280	196	181	257	239	125	243	2”
118124	HT110	555	280	196	181	257	239	125	243	2”